| 卷册检索号<br>SEARCH NO. OF THE VOLUME |
|---|
| MLHVDC-LCS-ECI-DD-CS-0808<br>30-B003701S-T0808 |

第 1 页 共 1 页
PAGE 1 OF 1

# 图纸文件目录（首页）

## CATALOG OF DRAWING DOCUMENTS (HEAD PAGE)

拉合尔±660kV换流站 工程 施工图 阶段
±660kV Lahore Converter Station PROJECT Detail Design DESIGN STAGE

结构 专业 第 08 卷 第 08 册
Structure SPECIALITY VOLUME BOOK

卷册名称 极2阀厅侧墙支架及避雷线塔图
Volume name The structure drawing of Side wall support and Lightning rod tower for Pole 2 valve hall

| | |
|---|---|
| 批 准<br>APPROVED BY | |
| 审 核<br>REVIEWED BY | |
| 设计/勘测<br>DESIGNED BY/ SURVEYED BY | 王新 2018.06.15 |
| 图 纸 6 张<br>DRAWING NOS. | 打印件 本<br>PRINTED COPIES NOS. |

| 序号<br>No. | 图 号<br>DRAWING NO. | 文 件 名 称<br>DOCUMENT TITLE | 版本<br>EDITION | 张<br>NOS. | 本<br>NOS. | 备注<br>REMARKS |
|---|---|---|---|---|---|---|
| 01 | 30-B003701S-T0808-001 | 钢构架加工说明<br>Specification of Steel Gantry | A | 1 | | |
| 02 | 30-B003701S-T0808-002 | 极2阀厅12.41米避雷线塔BLXT-1结构图(位于混凝土柱上)<br>Structure drawing of 12.41m height lightning rod tower BLXT-1 for Pole 2 valve hall (Over the concrete column) | A | 1 | | |
| 03 | 30-B003701S-T0808-003 | 极2阀厅8.1米避雷线塔BLXT-2结构图(位于阀厅钢柱上)<br>Structure drawing of 8.1m height lightning rod tower BLXT-2 for Pole 2 valve hall (Over valve steel column) | A | 1 | | |
| 04 | 30-B003701S-T0808-004 | 极2阀厅中性线侧墙支柱绝缘子C1支架及避雷器C2支架结构图<br>The support structure drawing of Neutral Insulator C1 and Arrester C2 on the side of Pole 2 valve wall | A | 1 | | |
| 05 | 30-B003701S-T0808-005 | 极2阀厅侧墙直流极线接地开关D3支架结构图<br>The support structure drawing of Earthing switch D3 on the side of Pole 2 valve wall | A | 1 | | |
| 06 | 30-B003701S-T0808-006 | 极2阀厅侧墙中性接地开关D4支架结构图<br>The support structure drawing of Neutral earthing switch D4 on the side of Pole 2 valve wall | A | 1 | | |

1. GENERAL NOTES:

All dimemsions are in millimeters where not otherwise noted.

Note however that levels are noted in meters.

All steel members should adopt the anti-corrosive treatment of hot dip galvanizing.

The thickness of galvanization for member with more than 6.4mm thickness shall not be less than 825 g/m² on all steel section, and for member with more than 4.8 mm and less than 6.4mm thickness shall not be less than 600 g/m², and for member with less than 4.8mm thickness shall not be less than 530 g/m² . Threaded work shall have a coating of not less than 305 g/m²

2.MATERIALS:

Structural steel:

All steel material incorporated into the structure shall be grade Q235B and Q345B.

For section steel and plate, if the profile name is added with the letter "H", it is high tensile steel Q345B, or else is mild steel Q235B.

For steel grade Q235B, the yield strength shall not be less than 235MPa;

For steel grade Q345B, the yield strength shall not be less than 345MPa.

Structural bolts, nuts and washers:

Bolts shall be of steel grade 6.8 , hot dip galvanized, and match nuts and washers;

Nuts and washers shall be of steel grade 6.8, hot dip galvanized.

Welding rod:

The type of selected welding rod shall match the base metal in strength.

For steel Q235B, adpot type E43xx;

For steel Q345B, adpot type E50xx;

3.MANUFACTURE:

Only after making set-out detail, all members and gusset plates can be cut in the manufactory. The sizes of members listed in the steel schedule are only used to estimate total amount of steel.

In the fabrication process of steel gantry tower and girder members, trial assembly shall be done and then produce in batches.

Only after steel members of gantry tower and girder must match the requirements of the relevant design drawings and standards, they can be transported to the construction-site.

Welding shall be finished before hot dip galvanizing.

In order to avoid bending, the hanging points shall be properly selected while galvanized steel members are taken out from the galvanization caldron,

All production welding shall be carried out in accordance with the requirements of the relevant AWS of welding.

The leg size of fillet welds shoud not be less than the thickness of the thinner part welded, but not more than 1.2 times that.

For the thick plate , grooving should be adopted in order to ensure the strength of connection.

The spacing between ends of angles shall be 10mm.

For the type of inside splice angle, the angle of splice angle will be filleted.

For the type of outer splice angle, the inside arc of splice angle will be cut into right-angle.

The standard dimensions of steel angle neat line and bolt, max.allowable diameter of bolt hole should be taken from Table 1, where not otherwise noted in the drawing .

The standard spacing between centres of bolts , edge and end distances on steel angles and gussets should be taken from Table 2, where not otherwise noted in the drawing.

All specs of bolts and washers should be taken from Table 3.

4.TRANSPORTATION AND STACKING:

During the transportation, the same kind of members should be tied up into bundles. To avoid the deformation of the members and the damage of galvanized layer due to mutual collision, the sleepers should be lined at the bottom of the members and between their layers.

After the transporting the membes to the construction-site, they should be piled separately according to the numbe of gantry tower and girder to avoid confusion during asembly.

The damaged part of zinc layer, which is caused by transportation and hoisting, should be cleaned and then brushed with zinc rich paint.

5.After erection of gantry structure,the holding-down pad shall be welded with the leg slab ,then brushed with zinc rich paint.

The holding-down pad shall be welded with the leg bottom slab ,then brushed with zinc rich paint.

6.For steel Q235B shall confirm to GB/T 700; for steel Q345B shall confirm to GB/T 1591; for blots shall confirm to GB/T 5780; for nuts shall confirm to GB/T 41; for plain washer shall confirm to GB/T95; for spring washer shall confirm to GB/T 93.

1. 总说明：

标高标注的单位为米。

除特殊注明外，所有标注尺寸单位为毫米。

所有钢构件采用热浸锌防腐处理。

厚度6.4mm及以上构件镀锌厚度不小于825g/m²，厚度大于4.8mm且小于6.4mm构件镀锌厚度不小于600g/m²，厚度小于等于4.8mm构件镀锌厚度不小于530g/m²，螺丝扣的镀锌量不小于305g/m²。

2. 材料：

钢材：

钢结构所用的钢材为Q235B和Q345B级钢材.

图中型钢和钢板型号前标有字母"H"的为高强低合金钢Q345B，未标注字母"H"为普通钢Q235B。

对于Q235B级的钢材，其屈服强度不小于235MPa；

对于Q345B级的钢材，其屈服强度不小于345MPa。

螺栓，螺母和垫圈：

螺栓应为6.8级的热浸锌件，带有螺母、平垫圈和弹簧垫圈；

螺母、垫圈应为6.8级的热浸锌件。

焊条：

焊条类型应与连接母材材质匹配。

对于Q235B钢材，采用E43xx型焊条；

对于Q345B钢材，采用E50xx型焊条

3. 加工制造：

所有构件及节点板均需放样后下料，钢材明细表中的构件尺寸仅供备料用。

钢结构加工过程中必须进行试组装，然后才能成批加工。

钢结构加工必须满足相关图纸和验收规范要求方能运输到现场。

焊接构件应在完成焊接后再镀锌。

为避免镀锌构件从锌锅中取出时发生弯曲，应选择合适的吊点。

构件焊接应按照相应的美国焊接规程、规范的要求进行。

角焊缝高度不小于连接构件的最小厚度，但不大于1.2倍的连接构件的最小厚度。

对于较厚的焊件需采用坡口焊，保证连接强度。

两角钢对接接头处的间隙为10mm。

内包角钢连接时，采用铲内包角钢背的方法，外包角钢时采用铲外包角钢弧的方法。

角钢基准线和螺栓准线除图中注明外，应按表1采用。

角钢及节点板的螺栓间距、边距除图中注明外，应按表2采用。

各种螺栓规格、垫圈规格应按表3采用。

4. 运输与堆放：

运输期间，同类构件应捆绑成束堆放在一起。枕木放在构件末端和层间已防止变形和由于相互碰撞带来镀锌层的破坏。

构件运输到现场后，柱梁构件应分离堆放，以防组装期间带来混淆。

由于运输和吊装破坏的镀锌层部分，应先清洗，然后涂刷富锌漆。

5. 构架安装完毕后，地脚螺栓垫板与柱脚焊接，刷富锌漆防腐。

构架底脚板与垫板围焊，焊后刷富锌漆防腐。

6. 所有钢材均为轧制，且Q235B级钢材应符合现行国家标准GB/T700,Q345B级钢材应符合现行国家标准GB/T1591,螺栓应符合现行国家标准GB/T5780,螺母应符合现行国家标准GB/T41,平垫圈应符合现行国家标准GB/T95,弹簧垫圈应符合现行国家标准GB/T93.

TABLE 3

| COMPONENTS 部件名称 | GRADE 等级 | SPEC. 规格 (M X L1) | SYMBOL 符号 | NO THREADED LENGTH 无扣长L2 (mm) | CLAMPING LENGTH 夹紧厚度 (mm) | WEIGHT 重量(kg) | TORQUE 扭矩(N*m) |
|---|---|---|---|---|---|---|---|
| PERNO 螺栓 | 6.8 | M12x35 | ● | 6 | 7 ~ 11 | 0.0715 | 45 |
| | | M12x40 | ● | 11 | 12 ~ 16 | 0.0759 | |
| | | M12x45 | ● | 16 | 17 ~ 22 | 0.0802 | |
| | | M16x40 | ◕ | 6 | 7 ~ 12 | 0.1535 | 120 |
| | | M16x50 | ◕ | 12 | 13 ~ 22 | 0.1695 | |
| | | M16x60 | ◕ | 22 | 23 ~ 32 | 0.1855 | |
| | | M16x70 | ◕ | 32 | 33 ~ 42 | 0.2015 | |
| | | M20x45 | ○ | 8 | 9 ~ 15 | 0.2877 | 230 |
| | | M20x55 | ⊘ | 15 | 16 ~ 25 | 0.3129 | |
| | | M20x65 | ⊠ | 25 | 26 ~ 35 | 0.3381 | |
| | | M20x75 | ⊘ | 35 | 36 ~ 45 | 0.3633 | |
| | | M20x85 | ⊠ | 45 | 46 ~ 55 | 0.3885 | |
| | | M20x95 | ⊠ | 55 | 56 ~ 65 | 0.4137 | |
| | | M20x105 | ⊠ | 65 | 66 ~ 75 | 0.4389 | |
| | | M24x55 | ◎ | 12 | 13 ~ 20 | 0.5027 | 380 |
| | | M24x65 | ⊘ | 20 | 21 ~ 30 | 0.5396 | |
| | | M24x75 | ⊠ | 30 | 31 ~ 40 | 0.5764 | |
| | | M24x85 | ⊘ | 40 | 41 ~ 50 | 0.6133 | |
| | | M24x95 | ⊠ | 50 | 51 ~ 60 | 0.6501 | |
| | | M24x105 | ⊠ | 60 | 61 ~ 70 | 0.6869 | |
| PLAIN WASHER 平垫圈 | Q235B | t1 −2.5 | thk.xNo. 厚度x个数 | d=13.5 D=24 | | 0.00494 | / |
| | | −3(A) | | d=17.5 D=30 | | 0.01065 | |
| | | −3(B) | | d=22 D=37 | | 0.01637 | |
| | | −4 | | d=26 D=44 | | 0.03164 | |
| SPRING WASHER 弹簧垫圈 | Q235B | t2 −3 | thk.xNo. 厚度x个数 | d=13 D=21.5 | | 0.00552 | |
| | | | | d=17 D=28 | | 0.00932 | |
| | | −4 | | d=21 D=33.5 | | 0.01761 | |
| | | −5 | | d=26 D=44 | | 0.03955 | |

Note: The weight of single nut bolt includes one plain washer, one spring washer and one nut.
The weight of doubt nut bolt includes one plain washer and two nuts.
注:单螺母螺栓带重包括一平垫圈、一弹簧垫圈、一螺母;双螺母螺栓带重包括一平垫圈、两螺母。

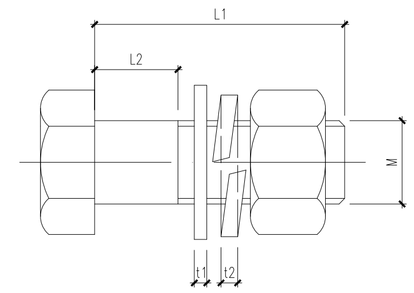


PRINCIPAL DIMENSION OF CONNECTING BOLT
连接螺栓的主要尺寸

TABLE 1

| No. 编号 | 角钢肢宽 FLANGE DIMENSION L | BOLT DIMENSION 螺栓容线距 SINGLE LINE 单排 G | DOUBLE LINES 双排 G1 | DOUBLE LINES 双排 G2 | MAX. ALLOWABLE DIAMETER OF BOLT HOLE 最大允许开孔直径 ø |
|---|---|---|---|---|---|
| 1 | 40 | 20 | | | 13.5 |
| 2 | 45 | 23 | | | 17.5 |
| 3 | 50 | 25 | | | |
| 4 | 56 | 28 | | | |
| 5 | 63 | 30 | | | 21.5 |
| 6 | 70 | 35 | | | |
| 7 | 75 | 38 | | | |
| 8 | 80 | 40 | | | |
| 9 | 90 | 45 | | | |
| 10 | 100 | 50 | | | |
| 11 | 110 | 55 | 45 | 75 | |
| 12 | 125 | 60 | 50 | 85 | |
| 13 | 140 | 70 | 55 | 90 | 25.5 |
| 14 | 160 | 80 | 60 | 105 | |
| 15 | 180 | 90 | 65 | 120 | |
| 16 | 200 | 100 | 75 | 135 | |

Note: the unit of all values listed in the table is millimeter.

TABLE 2

| NOMINAL DIA OF BOLT 螺栓直径 | DIA. DE AGUJERO 螺栓孔直径 | DISTANCE BETWEEN CENTRES 螺栓孔距 SINGLE LINE 单排 S1 | DOUBLE LINES 双排 S2 | EDGE AND END DISTANCE 螺栓边距及端距 Ld | Lz | La |
|---|---|---|---|---|---|---|
| 12 | 13.5 | 40 | 60 | 25 | >17 | >18 |
| 16 | 17.5 | 50 | 80 | 25 | >21 | >23 |
| 20 | 21.5 | 60 | 100 | 30 | >26 | >28 |
| 24 | 25.5 | 80 | 120 | 40 | >31 | >33 |

Note: the unit of all values listed in the table is millimeter.
"Lz" is the edge distance for a rolled edge.
"La" is the edge distance for a sheared edge.
"Ld" is the end distance.

Reference Drawings

| Drwg. No. | Title |
|---|---|
| 30-B003701S-T0802-005 | ±0.000m structure layout for pole 1 valve hall and firewall |
| 30-B003701S-T0802-003 | plan layout of pile cap for pole 1 valve hall and firewall |
| 30-B003701S-T0802-002 | General specification of foundations for pole 1 valve hall and firewall |

| Revisions | | | |
|---|---|---|---|
| A | 王轩 | 2018.06.15 | First issue |
| | Name | Date | Notes |

巴基斯坦默蒂亚里—拉合尔±660kV直流输电工程
±660kV HVDC Project from Matiari to Lahore in Pakistan

NATIONAL TRANSMISSION & DESPATCH COMPANY (NTDC) LIMITED PAKISTAN

CONTRACTOR 国家电网 STATE GRID 中国电力技术装备有限公司 CHINA ELECTRIC POWER EQUIPMENT AND TECHNOLOGY CO.,LTD.

SUBCONTRACTOR East China Electric Power Design Institute Co.,Ltd.

拉合尔±660kV换流站
±660kV Lahore Converter Station

设计阶段 PHASE: 施工图 Detail Design

M L H V D C - L C S - E C I - D D - C S - 0 8 0 8 - 0 0 1 A

| | 姓名 Name | 日期 Date |
|---|---|---|
| 设计 Designed | 王轩 | 18.06.15 |
| 校核 Checked | 安洪涛 | 18.06.16 |
| 审核 Reviewed | 邓川林 | 18.06.17 |
| 批准 Approved | 杨俊 | 18.06.17 |

钢构架加工说明
Specification of Steel Gantry

| 电气 | | |
|---|---|---|
| 专业 Speciality | 会签 Sign | 日期 Date |

比例 Scale: | 图号 DWG NO.: 30-B003701S-T0808-001 | 版本 REV.: A

594X841

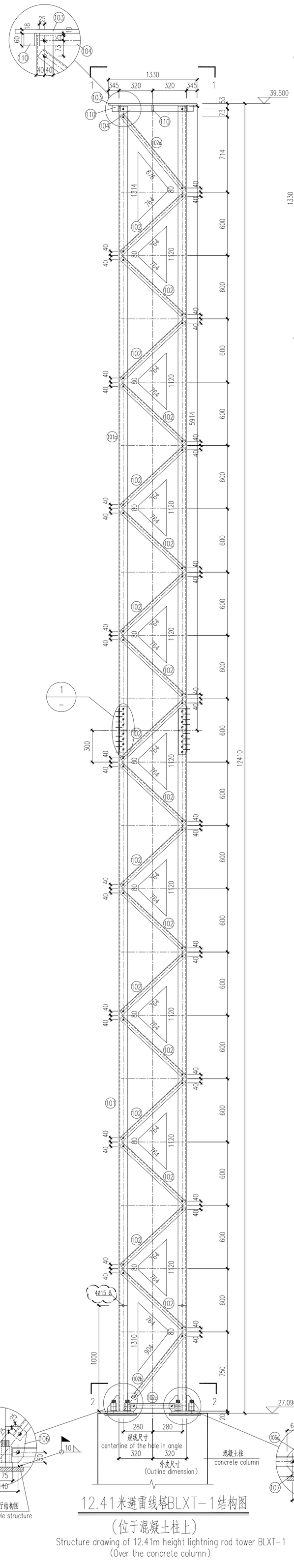


12.41米避雷线塔BLXT-1结构图

(位于混凝土柱上)

Structure drawing of 12.41m height lightning rod tower BLXT-1
(Over the concrete column)

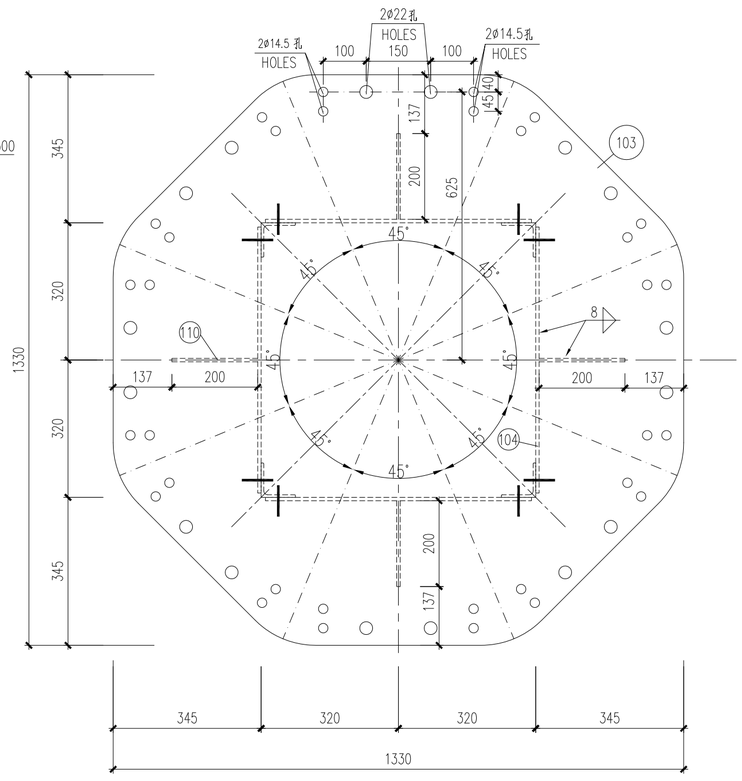


1—1

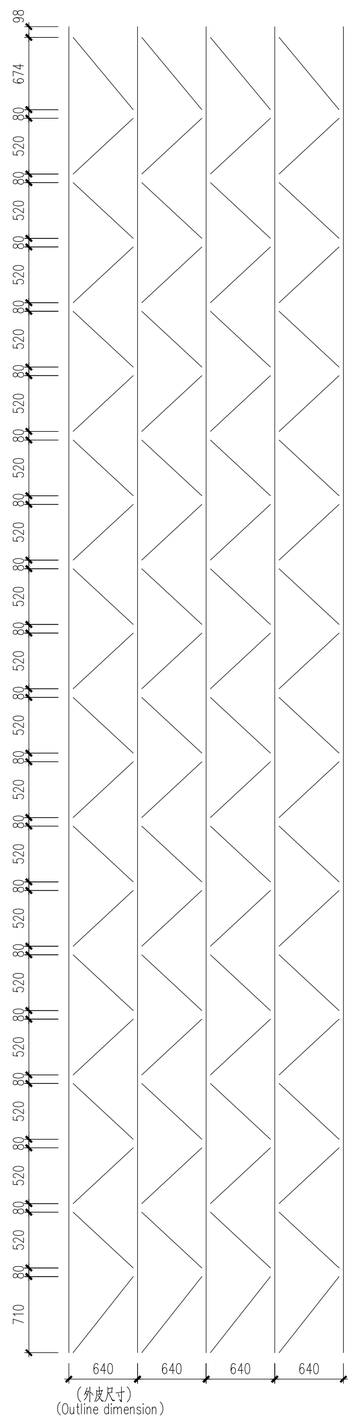


展开图

Unfold view

钢材材料表 Material list of steel

| 构件名称 Name | 序号 NO. | 规格 Type | 长度(mm) Length(mm) | 数量 Quantity | 单重(kg) Unit weight(kg) | 小计(kg) Total weight(kg) | 备注 Note |
|---|---|---|---|---|---|---|---|
| 12.41米避雷线塔BLXT-1 12.41m height lightning rod tower BLXT-1 | 101 | HL80X10 | 6445 | 4 | 62.25 | 249.00 | Q345B |
| | 101a | HL80X10 | 5907 | 4 | 57.07 | 228.28 | Q345B |
| | 102 | L45X5 | 814 | 72 | 2.74 | 197.28 | |
| | 102a | L45X5 | 926 | 4 | 2.89 | 11.56 | |
| | 102b | L45X5 | 779 | 4 | 2.63 | 10.52 | |
| | 102c | L45X5 | 410 | 4 | 1.38 | 5.52 | |
| | 103 | -18X1330 | 1330 | 1 | 88.62 | 88.62 | Q345B |
| | 104 | -8X60 | 610 | 4 | 2.30 | 9.2 | |
| | 105 | -6X110 | 150 | 8 | 0.78 | 6.24 | Q345B |
| | 106 | -6X110 | 175 | 4 | 0.91 | 3.64 | Q345B |
| | 106a | -6X85 | 150 | 4 | 0.60 | 2.4 | Q345B |
| | 107 | -20X250 | 250 | 4 | 9.81 | 39.24 | Q345B |
| | 108 | -6X70 | 435 | 8 | 1.44 | 11.52 | Q345B |
| | 109 | HL70X6 | 435 | 4 | 2.79 | 11.16 | Q345B |
| | 110 | -8X200 | 200 | 4 | 0.75 | 3.01 | |
| | Total (kg) 合计(kg) | | | | | 877.19 | |

以上为1座避雷线塔的钢材量。

The material list is for one tower.

螺栓明细表 Material list of bolts

| 构件名称 Name | 规格 Type | 符号 Symbol | 数量 Quantity | 单重(kg) Unit weight(kg) | 小计(kg) Total weight(kg) | 备注 Note |
|---|---|---|---|---|---|---|
| 螺栓 Bolts | M16X50 | ⌀ | 240 | 0.1602 | 38.448 | 6.8级，包含一平垫，一弹垫 Grade 6.8, include one washer and one lock washer |
| | 螺栓总重(kg) Total weight(kg) | | | | 38.448 | |

以上为1座避雷线塔的螺栓量。

The material list is for one tower.

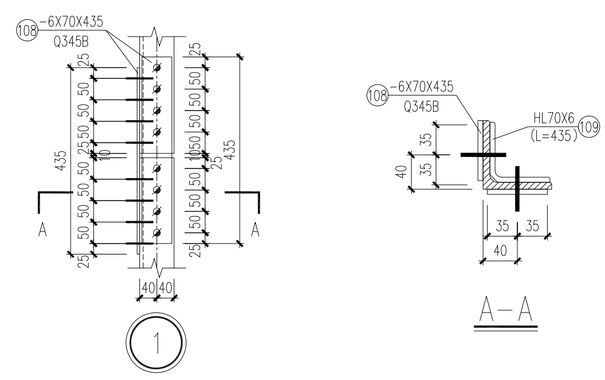


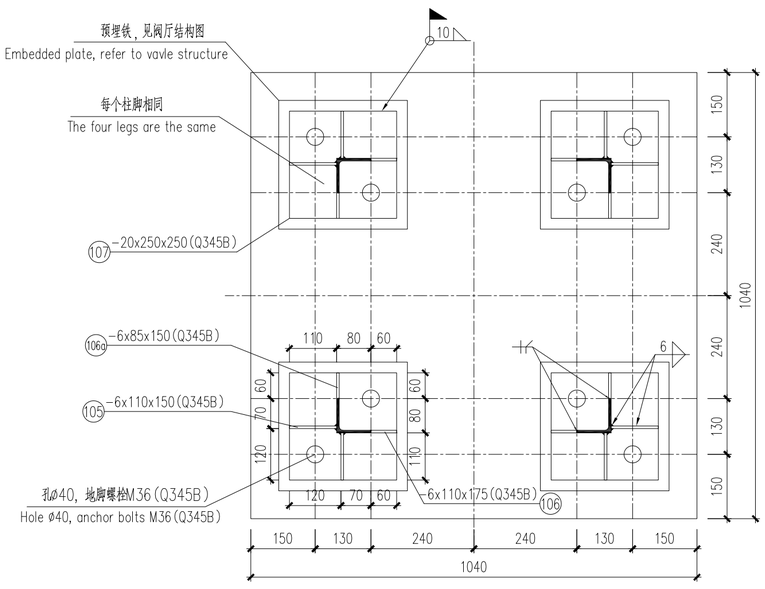


2—2

Notes:

1. The absolute altitude of elevation 0.000m is the same with the valve hall's, referring to the drawing T0807.
2. The location of 12.41m height lightning rod tower BLXT-1 refers to drawing T0402-005, total 1.
3. All the steel shall be grade Q235B where not otherwise noted, full welding with 8mm welding height for unspecified welding.
4. All steel members( include bolts and its nuts, washers) should be galvanized. The requirements of field welding refer to main steel structure's of valve hall. All production welding shall be carried out in accordance with the requirements of the relevant AWS of welding.
5. The material table is for reference only. All reinforcements could be placed after set out.
6. Other notes refer to drawing 001.

说明：

1. 本图中零米标高同阀厅零米标高。
2. 12.41米避雷线塔BLXT-1平面位置见T0807分册005图，共1座。
3. 除特殊注明外，本图钢材Q235B，所有连接铁件均满焊，未注明焊脚尺寸为8mm。
4. 构件(包括螺栓及其螺母、垫片)采用热镀锌防腐，现场焊接处同阀厅主体钢结构现场焊接处理。构件焊接应按照相应的美国焊接规程、规范的要求进行。
5. 材料表仅供参考，所有构件放样下料。
6. 其他说明见001图。

Reference Drawings

| Drwg. No. | Title |
|---|---|
| 30-B003701S-T0802-005 | ±0.000m structure layout for pole 1 valve hall and firewall |
| 30-B003701S-T0802-003 | plan layout of pile cap for pole 1 valve hall and firewall |
| 30-B003701S-T0802-002 | General specification of foundations for pole 1 valve hall and firewall |

| Revisions | | | |
|---|---|---|---|
| A | 王轩 | 2018.06.15 | First issue |
| | Name | Date | Notes |

巴基斯坦默蒂亚里—拉合尔±660kV直流输电工程

±660kV HVDC Project from Matiari to Lahore in Pakistan

NATIONAL TRANSMISSION & DESPATCH COMPANY (NTDC) LIMITED PAKISTAN

CONTRACTOR 国家电网 STATE GRID 中国电力技术装备有限公司 CHINA ELECTRIC POWER EQUIPMENT AND TECHNOLOGY CO.,LTD.

SUBCONTRACTOR East China Electric Power Design Institute Co.,Ltd.

拉合尔±660kV换流站

±660kV Lahore Converter Station

设计阶段 PHASE: 施工图 Detail Design

M L H V D C - L C S - E C I - D D - C S - 0 8 0 8 - 0 0 2 A

| | 姓名 Name | 日期 Date |
|---|---|---|
| 设计 Designed | 王轩 | 18.06.15 |
| 校核 Checked | 金[illegible] | 18.06.16 |
| 审核 Reviewed | 郑[illegible] | 18.06.17 |
| 批准 Approved | [illegible] | 18.06.17 |
| 比例 Scale | | 图号 DWG NO. |

极2阀厅12.41米避雷线塔BLXT-1结构图(位于混凝土柱上)

Structure drawing of 12.41m height lightning rod tower BLXT-1 for Pole 2 valve hall (Over the concrete column)

30-B003701S-T0808-002 版本 REV. A

| 专业 Speciality | 会签 Sign | 日期 Date |
|---|---|---|
| 电气 | 郑煜 | 18.06.15 |

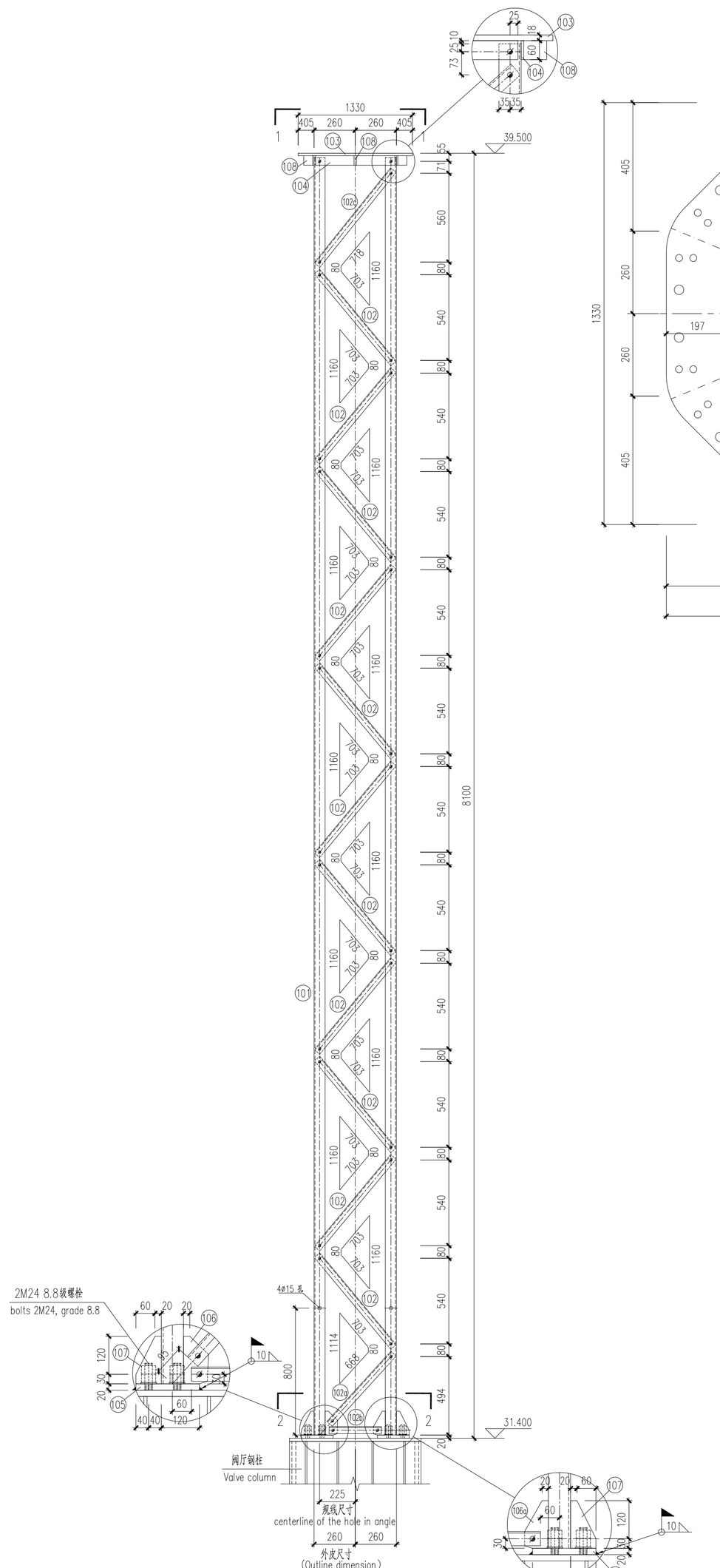


8.1米避雷线塔BLXT-2结构图

(位于阀厅钢柱上)

Structure drawing of 8.1m height lightning rod tower BLXT-2
(Over valve steel column)

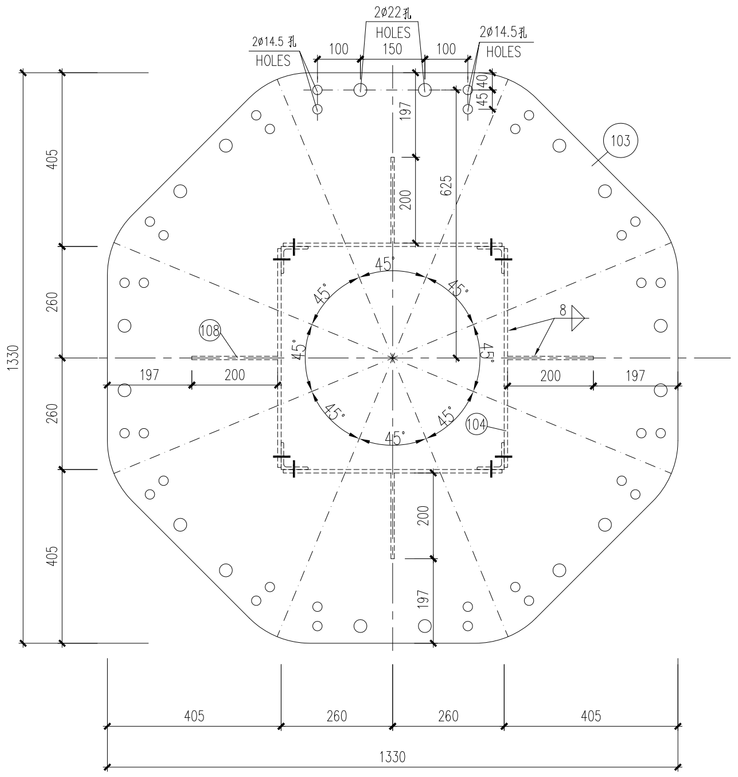


1-1

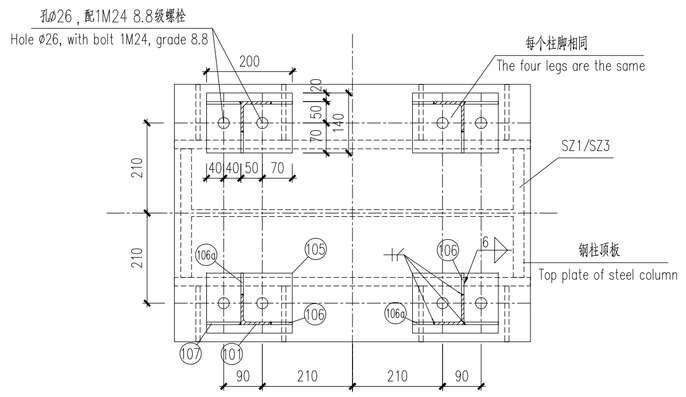


2-2

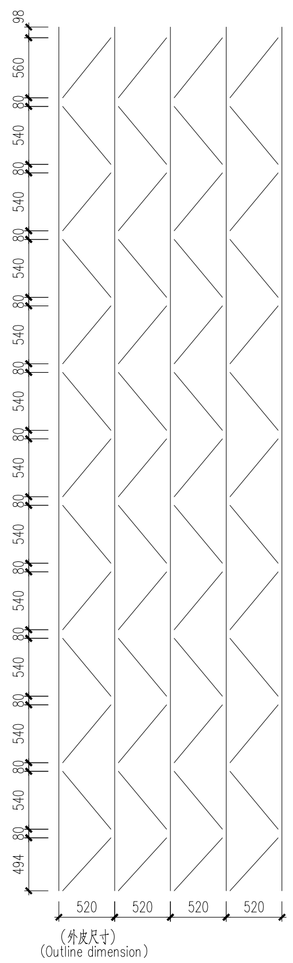


展开图

Unfold view

说明：

1. 8.1米避雷线塔避雷线塔BLXT-2平面位置见T0807分册005图，共5座。
2. 其他说明见001和002图。

Notes:

1. The location of 8.1m height lightning rod tower BLXT-2 refers to drawing T0807-005, total 5.
2. Other notes refer to drawing 001 and 002.

钢材材料表 Material list of steel

| 构件名称 Name | 序号 NO. | 规格 Type | 长度(mm) Length(mm) | 数量 Quantity | 单重(kg) Unit weight(kg) | 小计(kg) Total weight(kg) | 备注 Note |
|---|---|---|---|---|---|---|---|
| 8.1米避雷线塔BLXT-2 8.1m height lightning rod tower BLXT-2 | 101 | HL70X8 | 8052 | 4 | 59.58 | 238.32 | Q345B |
| | 102 | L45X5 | 753 | 44 | 2.54 | 111.76 | |
| | 102a | L45X5 | 598 | 4 | 2.02 | 8.08 | |
| | 102b | L45X5 | 330 | 4 | 1.11 | 4.44 | |
| | 102c | L45X5 | 768 | 4 | 2.59 | 10.36 | |
| | 103 | -18X1330 | 720 | 1 | 65.11 | 65.11 | Q345B |
| | 104 | -8X60 | 500 | 4 | 1.88 | 7.52 | |
| | 105 | -20X140 | 200 | 4 | 4.40 | 17.6 | Q345B |
| | 106 | -6X150 | 160 | 4 | 1.13 | 4.52 | Q345B |
| | 106a | -6X75 | 150 | 4 | 0.53 | 2.12 | Q345B |
| | 107 | -6X80 | 150 | 4 | 0.57 | 2.28 | Q345B |
| | 108 | -8X200 | 200 | 4 | 0.75 | 3.01 | |
| | Total (kg) 合计(kg) | | | | | 475.12 | |

以上为1座避雷线塔的钢材量。
The material list is for one tower.

螺栓明细表 Material list of bolts

| 构件名称 Name | 规格 Type | 符号 Symbol | 数量 Quantity | 单重(kg) Unit weight(kg) | 小计(kg) Total weight(kg) | 备注 Note |
|---|---|---|---|---|---|---|
| 螺栓 Bolts | M16X50 | | 120 | 0.1602 | 19.224 | 6.8级，包含一平垫，一弹垫 Grade 6.8, include one washer and one lock washer |
| | M24X85 | | 8 | 0.6133 | 4.9064 | 8.8级，包含一平垫，双螺母 Grade 8.8, include one washer and two nuts. |
| | 螺栓总重(kg) Total weight(kg) | | | | 24.13 | |

以上为1座避雷线塔的螺栓量。
The material list is for one tower.

Reference Drawings

| Drwg. No. | Title |
|---|---|
| 30-B003701S-T0802-005 | ±0.000m structure layout for pole 1 valve hall and firewall |
| 30-B003701S-T0802-003 | plan layout of pile cap for pole 1 valve hall and firewall |
| 30-B003701S-T0802-002 | General specification of foundations for pole 1 valve hall and firewall |

| Revisions | | | |
|---|---|---|---|
| A | 王轩 | 2018.06.15 | First issue |
| | Name | Date | Notes |

巴基斯坦默蒂亚里-拉合尔±660kV直流输电工程
±660kV HVDC Project from Matiari to Lahore in Pakistan

NATIONAL TRANSMISSION & DESPATCH COMPANY (NTDC) LIMITED PAKISTAN

CONTRACTOR 国家电网 STATE GRID 中国电力技术装备有限公司 CHINA ELECTRIC POWER EQUIPMENT & TECHNOLOGY CO.,LTD.

SUBCONTRACTOR East China Electric Power Design Institute Co.,Ltd.

拉合尔±660kV换流站
±660kV Lahore Converter Station

设计阶段 PHASE: 施工图 Detail Design

M L H V D C - L C S - E C I - D D - C S - 0 8 0 8 - 0 0 3 A

| | 姓名 Name | 日期 Date |
|---|---|---|
| 设计 Designed | 王轩 | 18.06.15 |
| 校核 Checked | 金洪涛 | 18.06.16 |
| 审核 Reviewed | 孙川林 | 18.06.17 |
| 批准 Approved | 刘国强 | 18.06.17 |
| 比例 Scale | | 图号 DWG NO. |

极2阀厅8.1米避雷线塔BLXT-2结构图(位于阀厅钢柱上)

Structure drawing of 8.1m height lightning rod tower BLXT-2 for Pole 2 valve hall (Over valve steel column)

30-B003701S-T0808-003

版本 REV. A

| 专业 Speciality | 会签 Sign | 日期 Date |
|---|---|---|
| 电气 | 郑炜 | 18.06.15 |

594X841

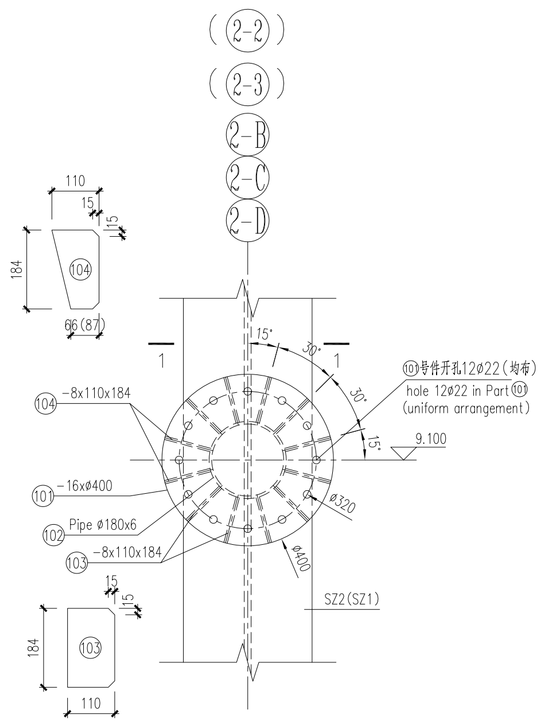


## 中性线侧墙支柱绝缘子C1支架

Neutral insulator C1 support on side wall of valve hall
(从阀厅内侧看)
(View inside valve hall)

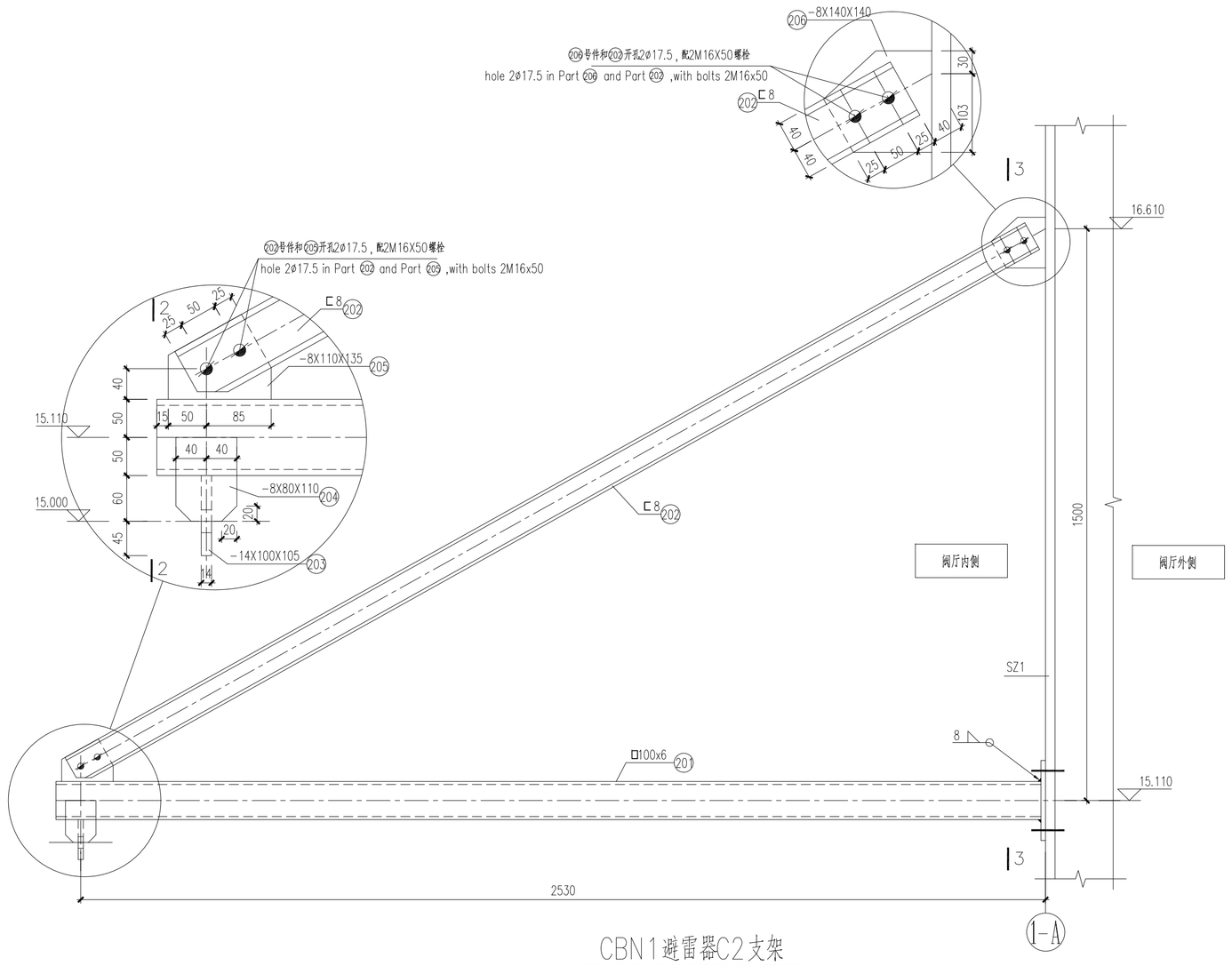


## CBN1避雷器C2支架

CBN1 Arrester C2 support on side wall of valve hall

钢材材料表 Material list of steel

| 构件名称 Name | 序号 NO. | 规格 Type | 长度(mm) Length(mm) | 数量 Quantity | 单重(kg) Unit weight(kg) (for one part) | 小计(kg) Total weight(kg) (for one part) | 合计(kg) Total weight(kg) | 备注 Note |
|---|---|---|---|---|---|---|---|---|
| 中性线侧墙支柱绝缘子C1支架 Neutral insulator C1 support | 101 | -16xø400 | | 1 | 15.78 | 15.78 | 35.76 | |
| | 102 | ø180x6 | 184 | 1 | 4.74 | 4.74 | | |
| | 103 | -8x110 | 184 | 8 | 1.27 | 10.16 | | |
| | 104 | -8x110 | 184 | 4 | 1.27 | 5.08 | | |
| | | | | | | | | |
| CBN1避雷器C2支架 CBN1 Arrester C2 support | 201 | □100x6 | 2583 | 1 | 45.74 | 45.74 | 78.01 | |
| | 202 | ⊏8 | 2881 | 1 | 23.18 | 23.18 | | |
| | 203 | -14X100 | 105 | 1 | 1.53 | 1.53 | | |
| | 204 | -8X80 | 110 | 2 | 0.55 | 1.10 | | |
| | 205 | -8x115 | 135 | 1 | 0.97 | 0.97 | | |
| | 206 | -8x140 | 140 | 1 | 1.23 | 1.23 | | |
| | 207 | -12X160 | 240 | 1 | 3.62 | 3.62 | | |
| | 螺栓 Bolts | ø M16X50 | | 4 | 0.1602 | 0.6408 | | 6.8级，包含一平垫，一弹垫 Grade 6.8, include one washer and lock washer |

以上均为1座支架的钢材量。
The material list is for one support.

说明：
1. 本图中零米标高同阀厅零米标高。
2. 中性线侧墙支柱绝缘子C1支架共5座，CBN1避雷器C2支架共1座。
3. 除特殊注明外，本图钢材Q235B，所有连接铁件均满焊，未注明焊脚尺寸为8mm。
4. 构件（包括螺栓及其螺母、垫片）采用热镀锌防腐，现场焊接处同阀厅主体钢结构现场焊接处理。构件焊接应按照相应的美国焊接规程、规范的要求进行。
5. 其他说明见001图。

Notes:
1. The absolute altitude of elevation 0.000m is the same with the valve hall's, referring to the drawing T0402.
2. There are 5 Neutral insulator C1 supports and 1 CBN1 Arrester C2 support in total .
3. All the steel shall be grade Q235B where not otherwise noted, full welding with 8mm welding height for unspecified welding.
4. All steel members( include bolts and its nuts, washers) should be galvanized. The requirements of field welding refer to main steel structure's of valve hall. All production welding shall be carried out in accordance with the requirements of the relevant AWS of welding.
5. Other notes refer to drawing 001.

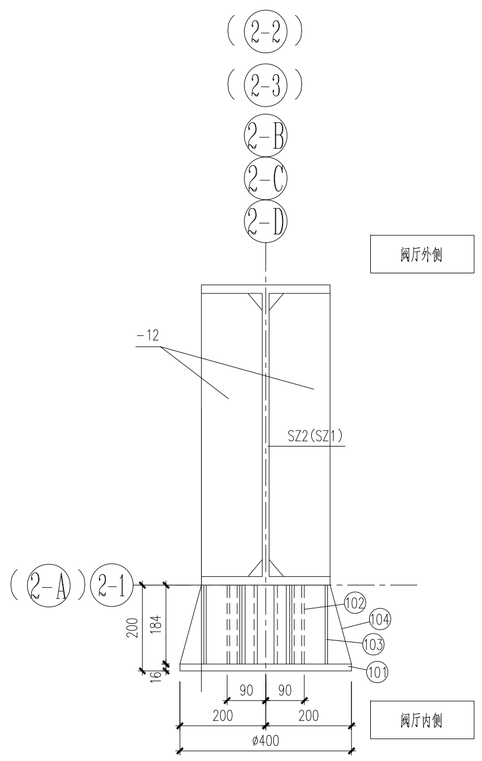


## 1—1

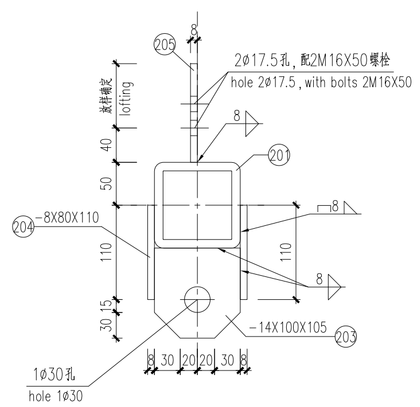


## 2—2

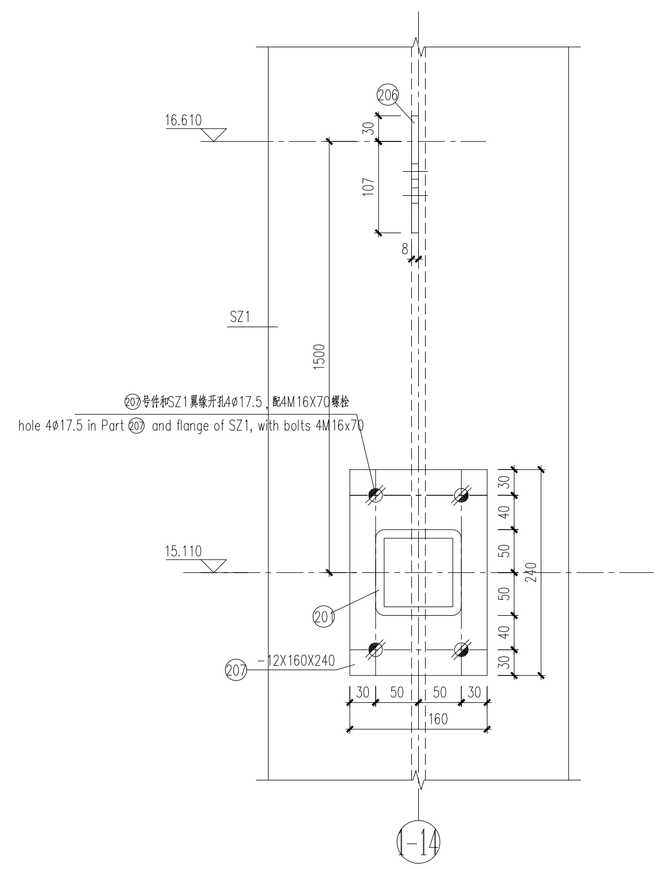


## 3—3

Reference Drawings

| Drwg. No. | Title |
|---|---|
| 30-B003701S-T0802-005 | ±0.000m structure layout for pole 1 valve hall and firewall |
| 30-B003701S-T0802-003 | plan layout of pile cap for pole 1 valve hall and firewall |
| 30-B003701S-T0802-002 | General specification of foundations for pole 1 valve hall and firewall |

Revisions

| | Name | Date | Notes |
|---|---|---|---|
| A | 王轩 | 2018.06.15 | First issue |

巴基斯坦默蒂亚里—拉合尔±660kV直流输电工程
±660kV HVDC Project from Matiari to Lahore in Pakistan

NATIONAL TRANSMISSION & DESPATCH COMPANY (NTDC) LIMITED PAKISTAN

CONTRACTOR 国家电网 STATE GRID 中国电力技术装备有限公司 CHINA ELECTRIC EQUIPMENT TECHNOLOGY CO.,LTD.

SUBCONTRACTOR East China Electric Power Design Institute Co.,Ltd.

拉合尔±660kV换流站
±660kV Lahore Converter Station

设计阶段 PHASE: 施工图 Detail Design

M L H V D C - L C S - E C I - D D - C S - 0 8 0 8 - 0 0 4 A

| | 姓名 Name | 日期 Date |
|---|---|---|
| 设计 Designed | 王轩 | 18.06.15 |
| 校核 Checked | 金祝萍 | 18.06.16 |
| 审核 Reviewed | 孙刚 | 18.06.17 |
| 批准 Approved | 刘国强 | 18.06.17 |

# 极2阀厅中性线侧墙支柱绝缘子C1支架及避雷器C2支架结构图

The support structure drawing of Neutral Insulator C1 and Arrester C2 on the side of Pole 2 valve wall

| 专业 Speciality | 会签 Sign | 日期 Date |
|---|---|---|
| 电气 | | |

比例 Scale: 图号 DWG NO. 30-B003701S-T0808-004 版本 REV. A

594X841

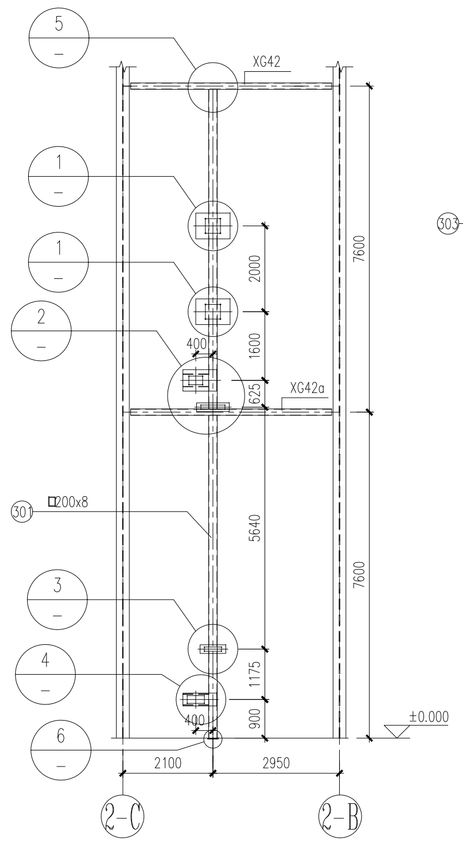


## 直流极线接地开关D3支架

Earthing switch D3 support on side wall of valve hall
(从阀厅内侧看)
(View inside valve hall)

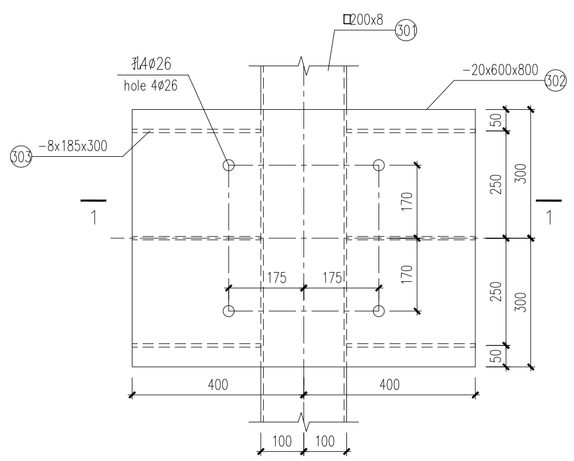


1

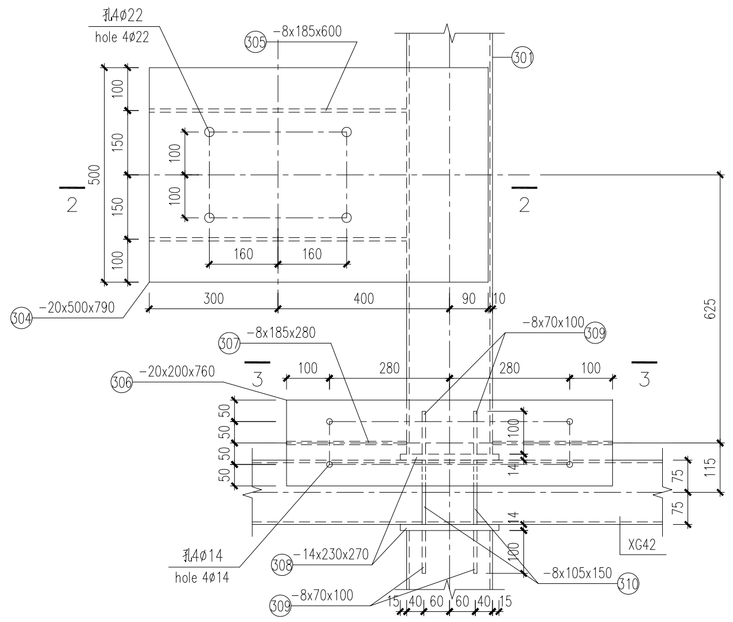


2

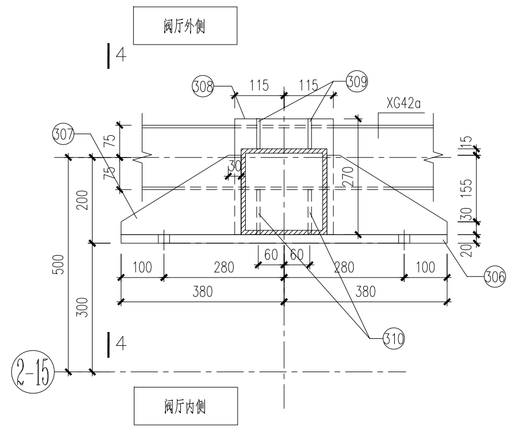


3-3

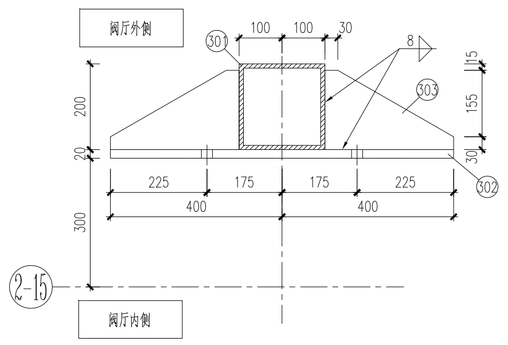


1-1

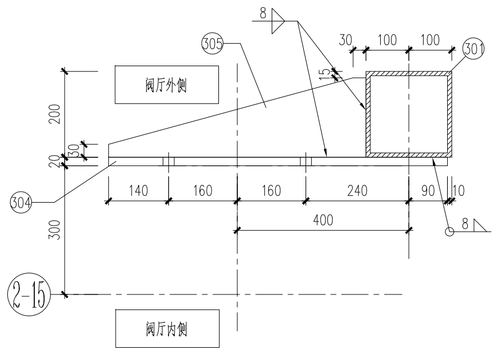


2-2

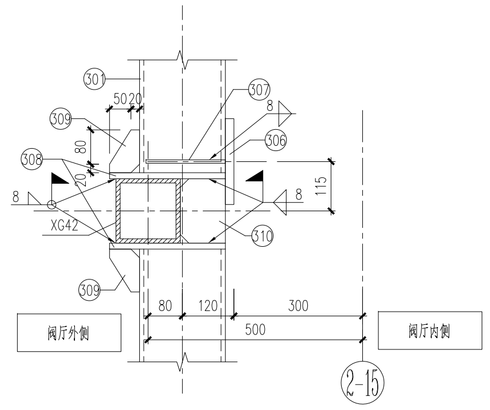


4-4

钢材材料表 Material list of steel

| 构件名称 Name | 序号 NO. | 规格 Type | 长度(mm) Length(mm) | 数量 Quantity | 单重(kg) Unit weight(kg) (for one part) | 小计(kg) Total weight(kg) (for one part) | 合计(kg) Total weight(kg) | 备注 Note |
|---|---|---|---|---|---|---|---|---|
| 直流极线接地开关D3支架 Earthing switch D3 support | 301 | □200x8 | 14927 | 1 | 719.94 | 719.94 | 1030.13 | |
| | 302 | -20x600 | 800 | 1 | 75.36 | 75.36 | | |
| | 303 | -8x185 | 300 | 6 | 3.49 | 20.94 | | |
| | 304 | -20x500 | 790 | 1 | 62.02 | 62.02 | | |
| | 305 | -8x185 | 600 | 2 | 6.97 | 13.94 | | |
| | 306 | -20x200 | 760 | 1 | 23.86 | 23.86 | | |
| | 307 | -8x185 | 280 | 2 | 3.25 | 6.5 | | |
| | 308 | -14x230 | 270 | 2 | 6.82 | 13.64 | | |
| | 309 | -8x70 | 100 | 4 | 1.32 | 5.28 | | |
| | 310 | -8x105 | 150 | 2 | 0.99 | 1.98 | | |
| | 311 | -20x200 | 600 | 1 | 18.84 | 18.84 | | |
| | 312 | -20x300 | 790 | 1 | 37.21 | 37.21 | | |
| | 313 | -8x185 | 600 | 2 | 6.97 | 13.94 | | |
| | 314 | -8x110 | 150 | 2 | 1.04 | 2.08 | | |
| | 315 | -8x55 | 100 | 2 | 0.35 | 0.7 | | |
| | 316 | -20x230 | 270 | 1 | 9.75 | 9.75 | | |
| | 317 | -10X230 | 230 | 1 | 4.15 | 4.15 | | |

以上均为1座支架的钢材量。
The material list is for one support.

说明:
1. 直流极线接地开关D3支架共1座。
2. 相关要求见001和003图

Notes:
1. There is 1 Earthing switch D3 support in total.
2. Other notes refer to drawing 001 and 003.

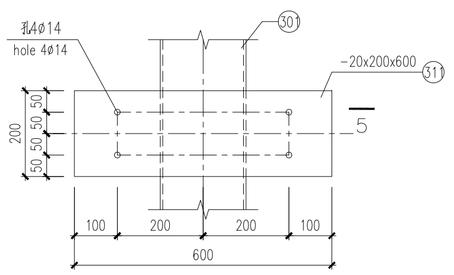


3

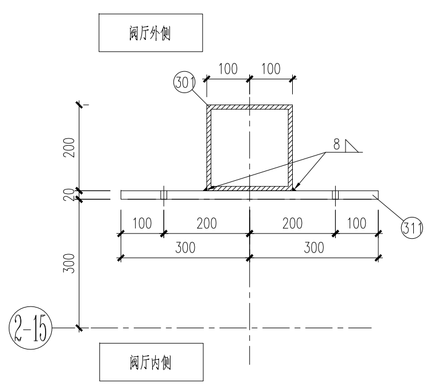


5-5

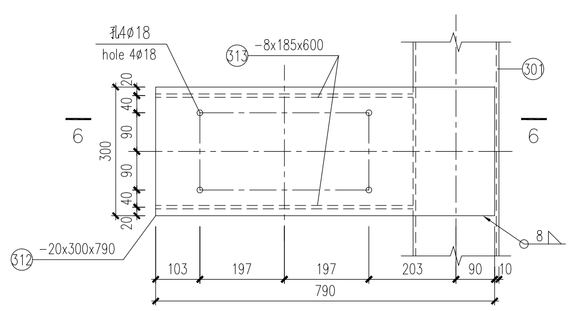


4

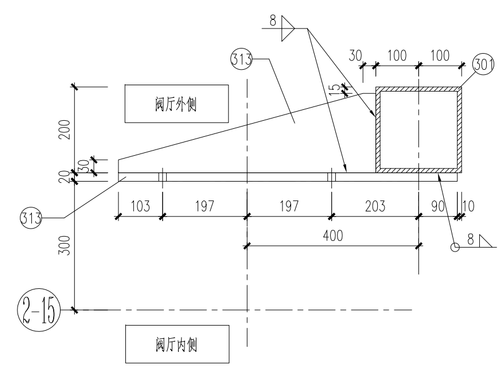


6-6

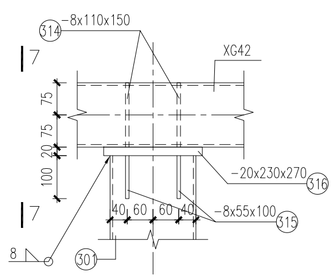


5

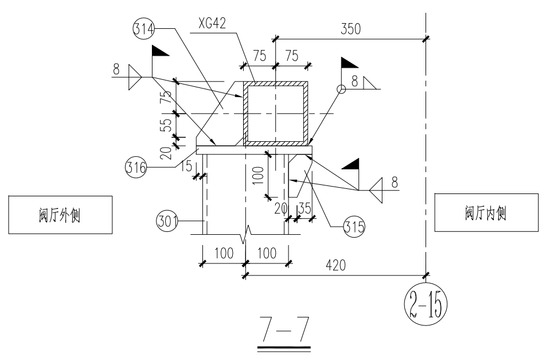


7-7

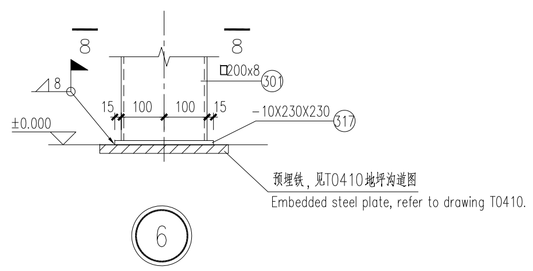


6

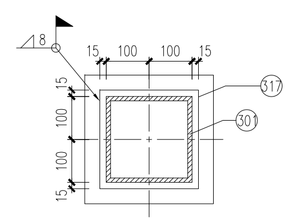

8-8

Reference Drawings

| Drwg. No. | Title |
|---|---|
| 30-B003701S-T0802-005 | ±0.000m structure layout for pole 1 valve hall and firewall |
| 30-B003701S-T0802-003 | plan layout of pile cap for pole 1 valve hall and firewall |
| 30-B003701S-T0802-002 | General specification of foundations for pole 1 valve hall and firewall |

Revisions

| | Name | Date | Notes |
|---|---|---|---|
| A | 王轩 | 2018.06.15 | First issue |

巴基斯坦默蒂亚里—拉合尔±660kV直流输电工程
±660kV HVDC Project from Matiari to Lahore in Pakistan

NATIONAL TRANSMISSION & DESPATCH COMPANY (NTDC) LIMITED PAKISTAN

CONTRACTOR 国家电网 STATE GRID 中国电力技术装备有限公司 CHINA ELECTRIC POWER EQUIPMENT AND TECHNOLOGY CO.,LTD.

SUBCONTRACTOR East China Electric Power Design Institute Co.,Ltd.

拉合尔±660kV换流站
±660kV Lahore Converter Station

设计阶段 PHASE: 施工图 Detail Design

M L H V D C - L C S - E C I - D D - C S - 0 8 0 8 - 0 0 5 A

| | 姓名 Name | 日期 Date |
|---|---|---|
| 设计 Designed | 王轩 | 18.06.15 |
| 校核 Checked | 金祝康 | 18.06.16 |
| 审核 Reviewed | 孙明林 | 18.06.17 |
| 批准 Approved | [illegible] | 18.06.17 |

# 极2阀厅侧墙直流极线接地开关D3支架结构图

The support structure drawing of Earthing switch D3 on the side of Pole 2 valve wall

| 电气 | | |
|---|---|---|
| 专业 Speciality | 会签 Sign | 日期 Date |

比例 Scale | 图号 DWG NO. 30-B003701S-T0808-005 | 版本 REV. A

594X841

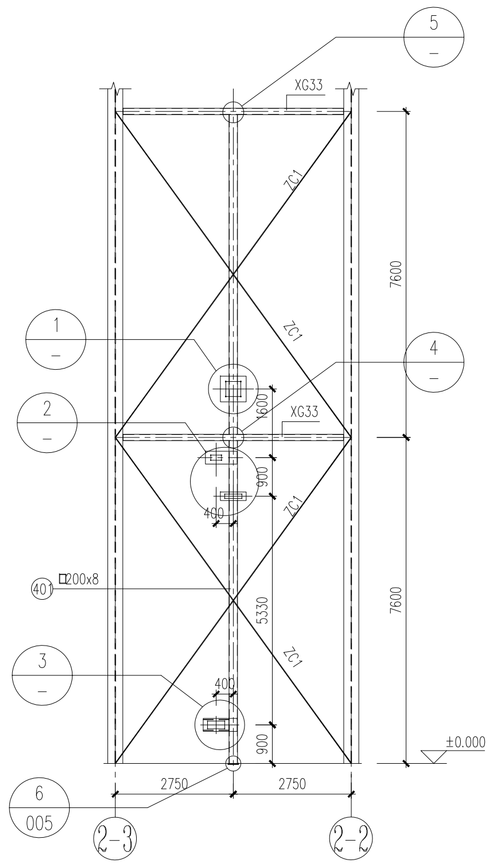


## 中性接地开关D4支架

Neutral earthing switch D4 support on side wall of valve hall

(从阀厅内侧看)

(View inside valve hall)

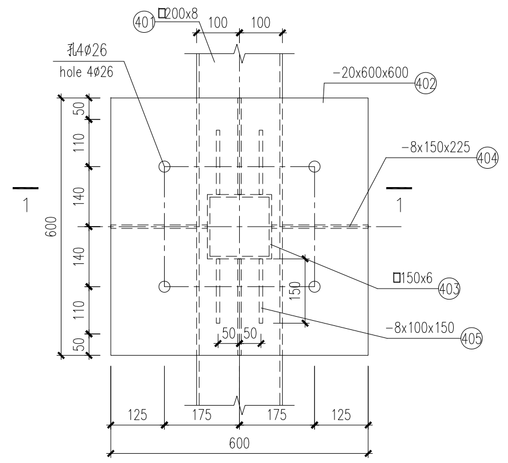


1

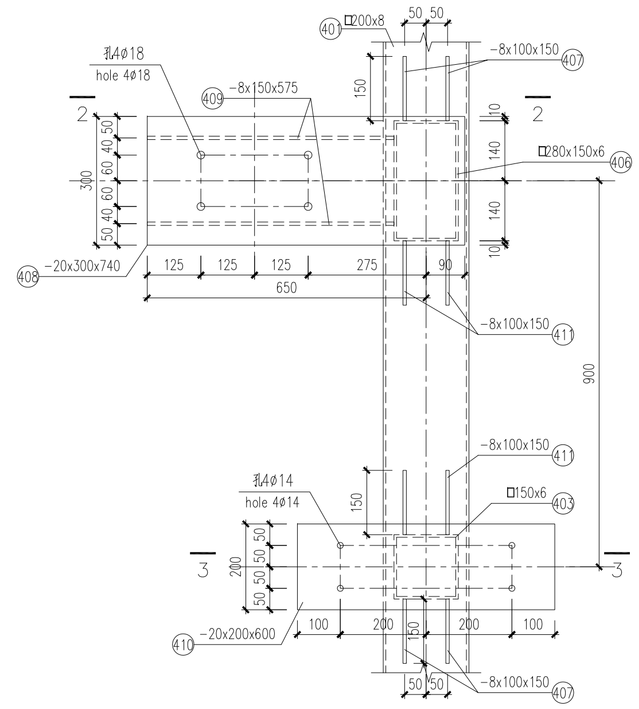


2

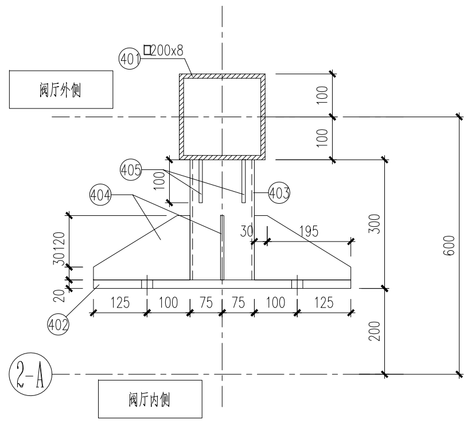


1-1

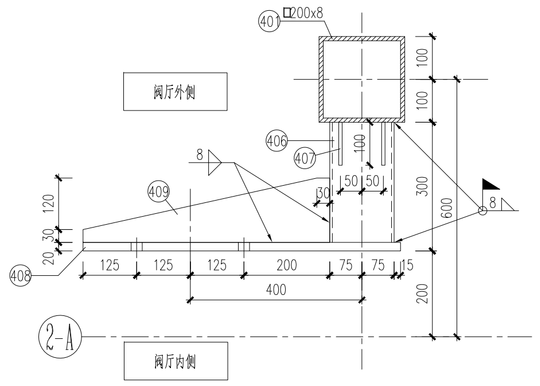


2-2

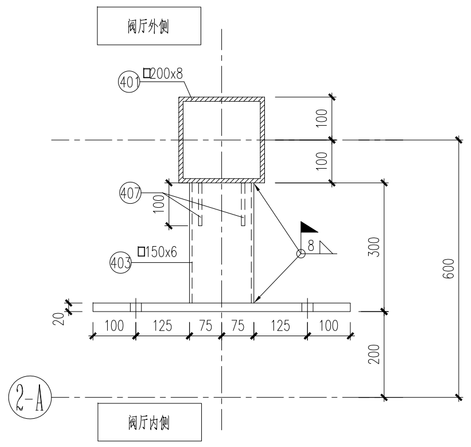


3-3

钢材材料表 Material list of steel

| 构件名称 Name | 序号 NO. | 规 格 Type | 长 度(mm) Length(mm) | 数 量 Quantity | 单重(kg) Unit weight(kg) (for one part) | 小计(kg) Total weight(kg) (for one part) | 合计(kg) Total weight(kg) | 备 注 Note |
|---|---|---|---|---|---|---|---|---|
| 中性接地开关D4支架 Neutral earthing switch D4 support | 401 | □200x8 | 15105 | 1 | 738.17 | 738.17 | 981.26 | |
| | 402 | -20x600 | 600 | 1 | 56.52 | 56.52 | | |
| | 403 | □150x6 | 280 | 2 | 7.60 | 15.2 | | |
| | 404 | -8x150 | 225 | 4 | 2.12 | 8.48 | | |
| | 405 | -8x100 | 150 | 4 | 0.94 | 3.76 | | |
| | 406 | □280x150x6 | 280 | 2 | 11.03 | 22.06 | | |
| | 407 | -8x100 | 150 | 8 | 0.94 | 7.52 | | |
| | 408 | -20x300 | 740 | 1 | 34.85 | 34.85 | | |
| | 409 | -8x150 | 575 | 2 | 5.42 | 10.84 | | |
| | 410 | -20x200 | 600 | 1 | 18.84 | 18.84 | | |
| | 411 | -8x100 | 150 | 4 | 0.94 | 3.76 | | |
| | 412 | -20x300 | 790 | 1 | 37.21 | 37.21 | | |
| | 413 | -8x150 | 625 | 2 | 5.89 | 11.78 | | |
| | 414 | -25x180 | 230 | 2 | 8.12 | 8.12 | | |
| | 317 | -10X230 | 230 | 1 | 4.15 | 4.15 | | 详图6，见005图 Detail NO.6, refer to drawing 005 |

以上均为1座支架的钢材量。

The material list is for one support.

说明：

1. 中性接地开关D4支架共1座。
2. 相关要求见001和003图

Notes:

1. There is 1 Neutral earthing switch D4 support in total.
2. Other notes refer to drawing 001 and 003.

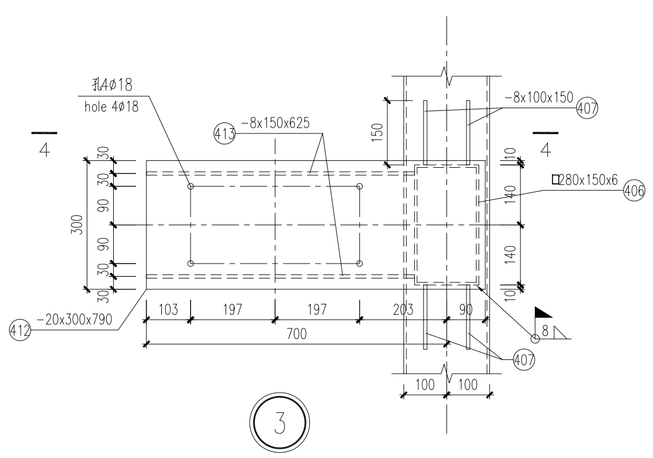


3

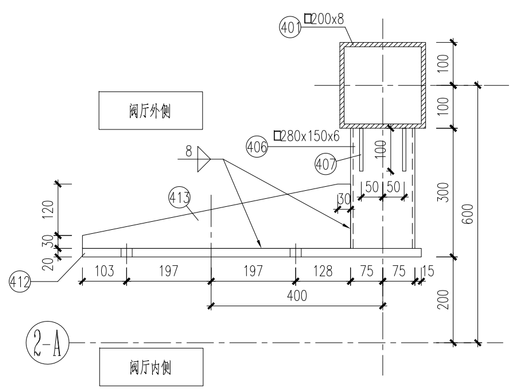


4-4

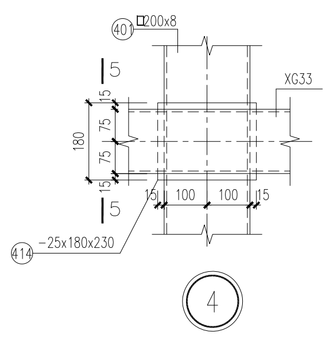


4

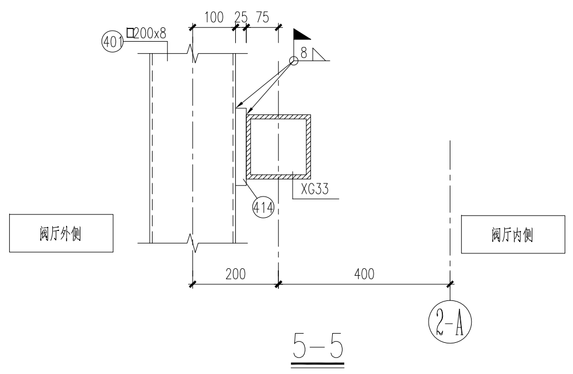


5-5

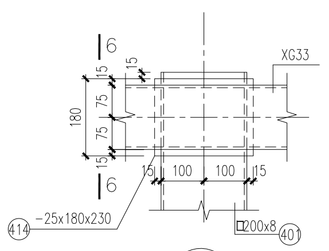


5

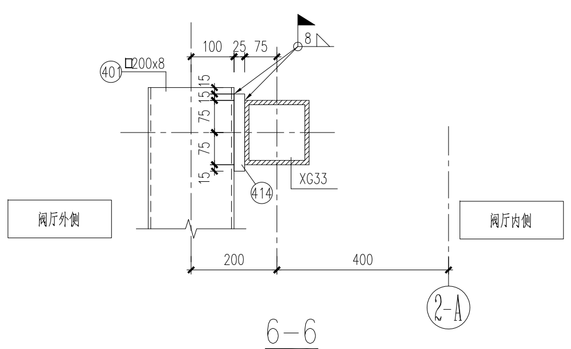


6-6

Reference Drawings

| Drwg. No. | Title |
|---|---|
| 30-B003701S-T0802-005 | ±0.000m structure layout for pole 1 valve hall and firewall |
| 30-B003701S-T0802-003 | plan layout of pile cap for pole 1 valve hall and firewall |
| 30-B003701S-T0802-002 | General specification of foundations for pole 1 valve hall and firewall |

Revisions

| | Name | Date | Notes |
|---|---|---|---|
| A | 王轩 | 2018.06.15 | First issue |

巴基斯坦默蒂亚里—拉合尔±660kV直流输电工程

±660kV HVDC Project from Matiari to Lahore in Pakistan

NATIONAL TRANSMISSION & DESPATCH COMPANY (NTDC) LIMITED PAKISTAN

CONTRACTOR 国家电网 STATE GRID 中国电力技术装备有限公司 CHINA ELECTRIC POWER EQUIPMENT AND TECHNOLOGY CO.,LTD.

SUBCONTRACTOR East China Electric Power Design Institute Co.,Ltd.

拉合尔±660kV换流站

±660kV Lahore Converter Station

设计阶段 PHASE: 施工图 Detail Design

M L H V D C - L C S - E C I - D D - C S - 0 8 0 8 - 0 0 6 A

| | 姓名 Name | 日期 Date |
|---|---|---|
| 设计 Designed | 王轩 | 18.06.15 |
| 校核 Checked | 金洪峰 | 18.06.16 |
| 审核 Reviewed | 印刘林 | 18.06.17 |
| 批准 Approved | 刘林 | 18.06.17 |

极2阀厅侧墙中性接地开关D4支架结构图

The support structure drawing of Neutral earthing switch D4 on the side of Pole 2 valve wall

比例 Scale: 图号 DWG NO.: 30-B003701S-T0808-006 版本 REV.: A

| 专业 Speciality | 会签 Sign | 日期 Date |
|---|---|---|
| 电气 | | |

594X841